ISSUE	REFERENCE	DATE	DETAIL OF CHANGE	C/N No.	CHKD
C	2	30-01-10	WAS KWH 431-10 , KWH 435-25	0064/10	T.MANA
D	1	19-07-10	WAS KWH 433-10	0328/10	T.MANA
E	3	12-09-11	WAS KWT 247-1 & REVISED DIMENSIONS	0350/11	T.MANA

UNCONTROLLED COPY

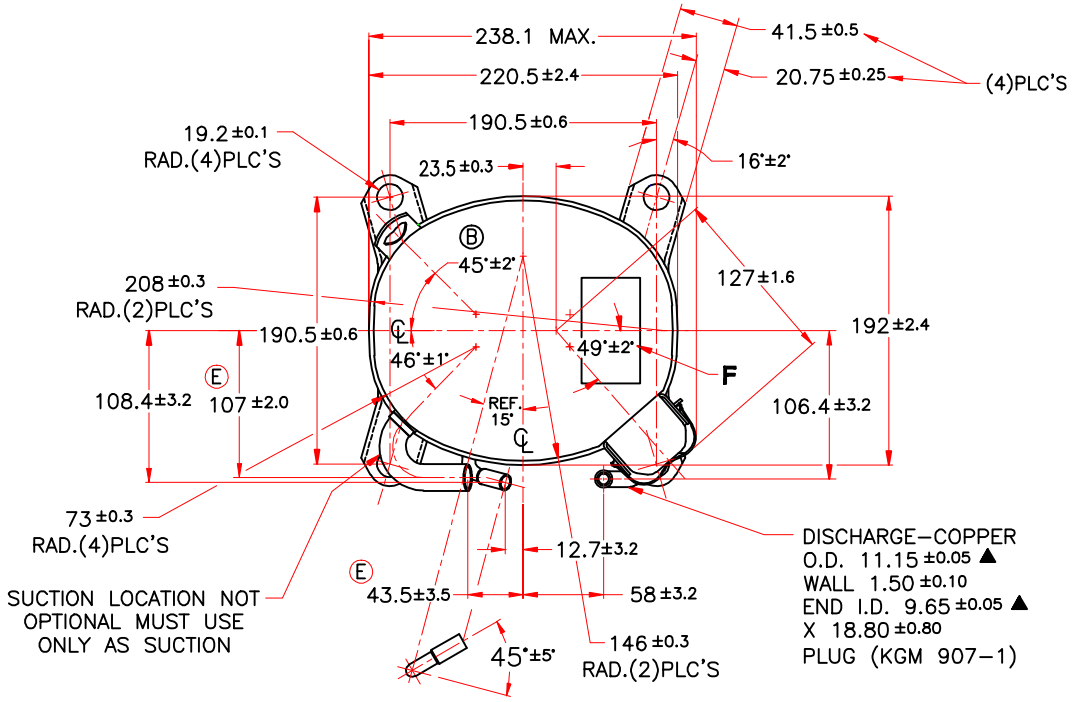

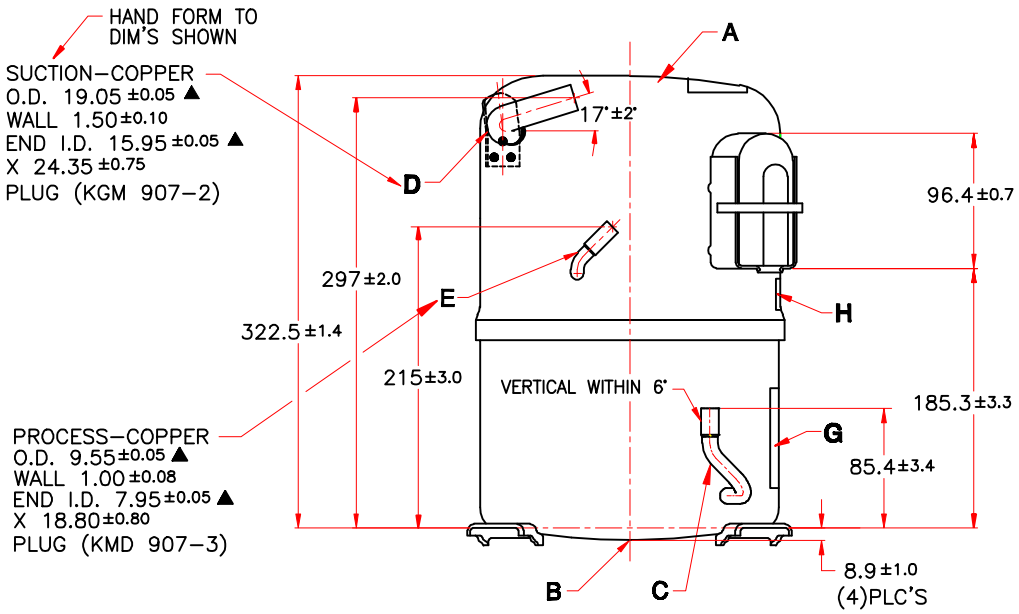

QA SYMBOLS	
▲	1 ST CRITICAL
■	2 ND CRITICAL
★	3 RD CRITICAL

	ITEM	K.K. P/No.	DESCRIPTION
	H	KEP 881-B	OIL LABEL
	G	KWP 880-1	WARNING STICKER
	F	KWP 885Z-84	SERAIL PLATE LABEL
	E	KWT 247-8	PROCESS TUBE
	D	KWT 247-17 Ⓔ	SUCTION TUBE
	C	KWT 231-1	DISCHARGE TUBE
©	B	KWH 433-1 Ⓓ	LOWER HOUSING
©	A	KWH 435-25T	UPPER HOUSING

NOTE.

1. IF SPECIFIED ON BILL OF MATERIAL ASSEMBLE THESE PARTS AS SHOWN.

UNLESS OTHERWISE SPECIFIED
1. AMERICAN PROJECTION (3rd ANGLE)
2. DIMENSIONS IN MM.
3. GENERAL TOLERANCES.
   WHOLE NUMBER ±1
   DECIMALS. ±1
   ANGLES ±30 MINUTES.
   COMMERCIAL TOLERANCES APPLY FOR GAUGE TUBING AND BAR STOCK.
4. ALL CASTINGS TO BE SUPPLIED FREE FROM FLASH AND POROSITY.
5. SURFACE FINISHES SPECIFIED IN MICRO INCHES MAXIMUM 200 UNLESS NOTED.

REMOVE BURRS AND SHARP CORNERS

DETAILED		MATERIAL :-	REF. TABLE
DRAWN	B.ANUPONG		
CHECKED	T.MANA	FINISH	REF. NOTE
APPROVED	C.CHARUWAT	QTY.	1/ASSY
DATE	12-09-11	PART No.	AW 2464Z-9 BOM ID 67T
SCALE	NTS	INTERNAL USE ONLY :-	

@SRVKKGMIN\LDS\DRAWING\DRAWING CAD\AW\Sales comp ex\AW 2464Z-9 ID 67T.DWG

KULTHORN KIRBY PUBLIC COMPANY LIMITED
126 LADKRABANG INDUSTRIAL ESTATE
BANGKOK 10520

TITLE :-
MOTOR COMPRESSOR

SHEET	1	SHEET SIZE	DRAWING No.
OF	1	A4	AW 2464Z-9 BOM ID 67T